TS7003

A 300ksps, Single-supply, 12-Bit Serial-output ADC

FEATURES

- Pin-Compatible, Single-channel Higher-Speed Upgrade to MAX1286
- Single-Supply Operation: +2.7V to +3.6V
- DNL & INL: ±1LSB (max)
- 300ksps Sampling Rate
- Low Conversion-Mode Supply Current: 0.95mA @ 300ksps
- Low Supply Current in Shutdown: 0.2µA
- Internal 10-MHzTrack-and-Hold
- Internal ±0.6%, 30ppm/ºC +2.5V Reference
- SPI/QSPI/MICROWIRE 3-Wire Serial-Interface
- 8-Pin, 3mm x 3mm TDFN-EP Package

APPLICATIONS

Process Control and Factory Automation
Data and Low-frequency Signal Acquisition
Portable Data Logging
Pen Digitizers & Tablet Computers
Medical Instrumentation
Battery-powered Instruments

DESCRIPTION

The TS7003 – a single-supply, single-channel, 12-bit analog-to-digital converter (ADC) - is a successive-approximation ADC that combines a high-bandwidth track-and-hold (T/H), a high-speed serial digital interface, an internal +2.5V reference, and low conversion-mode power consumption. The TS7003 operates from a single +2.7V to+3.6V supply and draws less than 1mA at 300ksps.

Connecting directly to any SPI™/QSPI™/ MICROWIRE™ microcontrollers and other interface-compatible computing devices, the TS7003's 3-wire serial interface is easy to use and doesn't require separate, external logic. An external serial-interface clock controls the TS7003's conversion process and its output shift register operation.

In PCB-space-conscious, low-power remote-sensor and data-acquisition applications, the TS7003 is an excellent choice for its low-power, ease-of-use, and small-package-footprint attributes.

As a pin-compatible and higher-speed upgrade to the MAX1286, the TS7003 is fully specified over the -40°C to +85°C temperature range and is available in a low-profile, 8-pin 3x3mm TDFN package with an exposed back-side paddle.

FUNCTIONAL BLOCK DIAGRAM

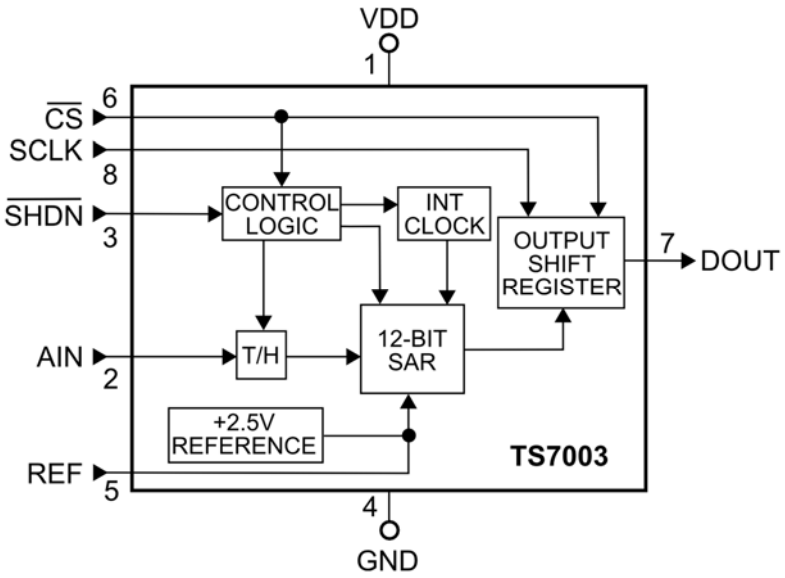

© 2014 Silicon Laboratories, Inc. All rights reserved.

ABSOLUTE MAXIMUM RATINGS

V_{DD} to GND ..... -0.3V to +6V
AIN to GND ..... -0.3V to (V_{DD} + 0.3V)
REF to GND ..... -0.3V to (V_{DD} + 0.3V)
Digital Inputs to GND ..... -0.3V to +6V
DOUT to GND ..... -0.3V to (V_{DD} + 0.3V)
DOUT Current ..... ±25mA
Continuous Power Dissipation (T_A = +70°C):
8-Pin TFDN33-EP (Derate 12.5mW/°C above +70°C) .1000mW

Operating Temperature Ranges:
TS7003I ..... -40°C to +85°C
Storage Temperature Range ..... -60°C to +150°C
Lead Temperature (Soldering, 10s) ..... +300°C
Soldering Temperature (Reflow) ..... +260°C

Electrical and thermal stresses beyond those listed under “Absolute Maximum Ratings” may cause permanent damage to the device. These are stress ratings only and functional operation of the device at these or any other condition beyond those indicated in the operational sections of the specifications is not implied. Exposure to any absolute maximum rating conditions for extended periods may affect device reliability and lifetime.

PACKAGE/ORDERING INFORMATION

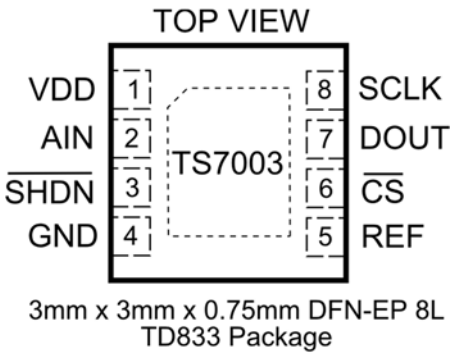

3mm x 3mm x 0.75mm DFN-EP 8L
TD833 Package

ORDER NUMBER	PART MARKING	CARRIER	QUANTITY
TS7003ITD833	7003I	Tape & Reel	-----
TS7003ITD833T		Tape & Reel	3000

Lead-free Program: Silicon Labs supplies only lead-free packaging.

Consult Silicon Labs for products specified with wider operating temperature ranges.

ELECTRICAL SPECIFICATIONS

V_{DD} = +2.7V to +3.6V; f_{SCLK} = 4.8MHz, 50% duty cycle, 16 clocks/conversion cycle, 300ksps; 4.7µF capacitor at REF; T_A = -40ºC to +85ºC, unless otherwise noted. Typical values apply at T_A = +25°C.

PARAMETER	SYMBOL	CONDITIONS	MIN	TYP	MAX	UNITS
DC ACCURACY (See Note 1)						
Resolution			12			Bits
Relative Accuracy	INL	See Note 2			±1.0	LSB
Differential Nonlinearity	DNL	No missing codes over temperature			±1.0	LSB
Offset Error	ZE				±6.0	LSB
Gain Error	GE	See Note 3			±6.0	LSB
Gain-Error Temperature Coefficient	TCGE			±1.6		ppm/°C
DYNAMIC SPECIFICATIONS (f_{IN} = 75kHz sine wave, 2.5V_{PP}, f_{SAMPLE} = 300ksps, f_{SCLK} = 4.8MHz)						
Signal-to-Noise Plus Distortion Ratio	SINAD			70		dB
Total Harmonic Distortion	THD	Including the 5th harmonic		-80		dB
Spurious-Free Dynamic Range	SFDR			80		dB
Intermodulation Distortion	IMD	f_A = 73kHz, f_B = 77kHz		76		dB
Full-Power Bandwidth	FPBW	-3dB point		10		MHz
Full-Linear Bandwidth	FLBW	SINAD > 68dB		300		kHz
CONVERSION RATE						
Conversion Time	t_{CONV}	See Note 4	3.3			µs
Track/Hold Acquisition Time	t_{ACQ}				625	ns
Aperture Delay	t_{AD}			10		ns
Aperture Jitter	t_{AJ}			< 50		ps
Serial Clock Frequency	t_{SCLK}		0.5		4.8	MHz
Duty Cycle			40		60	%
ANALOG INPUT (AIN)						
Input Voltage Range	V_{IN}		0		VREF	V
Input Capacitance	C_{INA}			10		pF
INTERNAL REFERENCE						
REF Output Voltage	VREF		2.485	2.50	2.515	V
REF Short-Circuit Current		T_A = +25°C		15		mA
REF Output Tempco	TCVREF			30		ppm/°C
Load Regulation		See Note 5; 0 to 0.75mA output load		3	5	mV/mA
Capacitive Bypass at REF			4.7		10	µF
DIGITAL INPUTS (SCLK, $\overline{CS}$, $\overline{SHDN}$)						
Input High Voltage	V_{INH}		2.4			V
Input Low Voltage	V_{INL}				0.8	V
Input Hysteresis	V_{HYST}			0.2		V
Input Leakage	I_{IN}	V_{INL} = 0V or V_{INH} = V_{DD}			±1	µA
Input Capacitance	C_{IND}			15		pF
DIGITAL OUTPUT (DOUT)						
Output Voltage Low	V_{OL}	I_{SINK} = 5mA	0.4			V
Output Voltage High	V_{OH}	I_{SOURCE} = 0.5mA	V_{DD} - 0.5			V
Three-State Leakage Current	I_L	$V_{\overline{CS}}$ = +3V		±10		µA
Three-State Output Capacitance	C_{OUT}	$V_{\overline{CS}}$ = +3V		15		pF
POWER SUPPLY						
Positive Supply Voltage	V_{DD}	See Note 6	2.7		3.6	V
Positive Supply Current	I_{DD}	See Note 7; V_{DD} = +3.6V		0.95	1.25	mA
Shutdown Supply Current	$I_{\overline{SHDN}}$	SCLK = V_{DD}, $\overline{SHDN}$ = GND		0.2	2	µA
Power-Supply Rejection	PSR	V_{DD} = +2.7V to 3.6V, midscale input		±0.5	±2.5	mV

TIMING SPECIFICATIONS

V_{DD} = +2.7V to +3.6V, T_A = -40ºC to +85ºC, unless otherwise noted.

PARAMETER	SYMBOL	CONDITIONS	MIN	TYP	MAX	UNITS
SCLK Period	t_{CP}		208			ns
SCLK Pulse-Width High	t_{CH}		83			ns
SCLK Pulse-Width Low	t_{CL}		83			ns
$\overline{CS}$ Fall to SCLK Rise Setup	t_{CSS}		45			ns
SCLK Rise to $\overline{CS}$ Rise Hold	t_{CSH}		0			ns
SCLK Rise to $\overline{CS}$ Fall Ignore	t_{CSO}		45			ns
$\overline{CS}$ Rise to SCLK Rise Ignore	t_{CS1}		45			ns
SCLK Rise to DOUT Hold	t_{DOH}	C_{LOAD} = 20pF	13			ns
SCLK Rise to DOUT Valid	t_{DOV}	C_{LOAD} = 20pF			100	ns
$\overline{CS}$ Rise to DOUT Disable	t_{DOD}	C_{LOAD} = 20pF; Refer to Figure 2	13		85	ns
$\overline{CS}$ Fall to DOUT Enable	t_{DOE}	C_{LOAD} = 20pF; Refer to Figure 1			85	ns
$\overline{CS}$ Pulse-Width High	t_{CSW}		100			ns

Note 1: Tested at $V_{DD} = V_{DD(MIN)}$.
Note 2: Relative accuracy is the deviation of the analog value at any code from its theoretical value after the full-scale range has been calibrated.
Note 3: Internal reference, offset, and reference errors nulled.
Note 4: Conversion time is defined as the number of clock cycles multiplied by the clock period; clock has 50% duty cycle.
Note 5: External load should not change during conversion for specified accuracy. Guaranteed specification limit of 2mV/mA because of production test limitations.
Note 6: Electrical characteristics are guaranteed from $V_{DD(MIN)}$ to $V_{DD(MAX)}$. For operations beyond this range, see Typical Operating Characteristics.
Note 7: TS7003 tested with 20pF on DOUT and f_{SCLK} = 4.8MHz, 0 to 3V. DOUT = full scale.

TYPICAL PERFORMANCE CHARACTERISTICS

V_{DD} = +3V; f_{SCLK} = 4.8MHz; C_{LOAD} = 20pF; 4.7µF capacitor at REF; T_A = 25ºC, unless otherwise noted.

Integral Nonlinearity

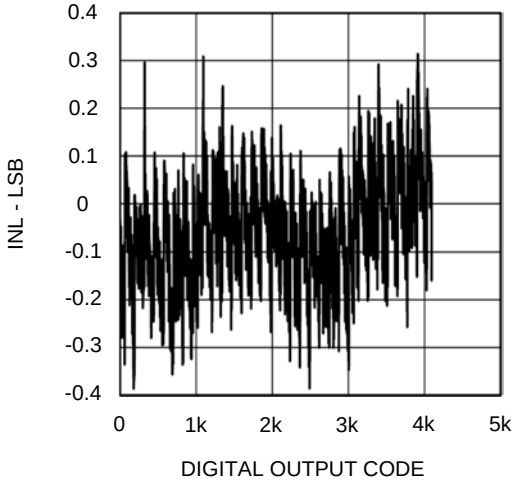

Differential Nonlinearity

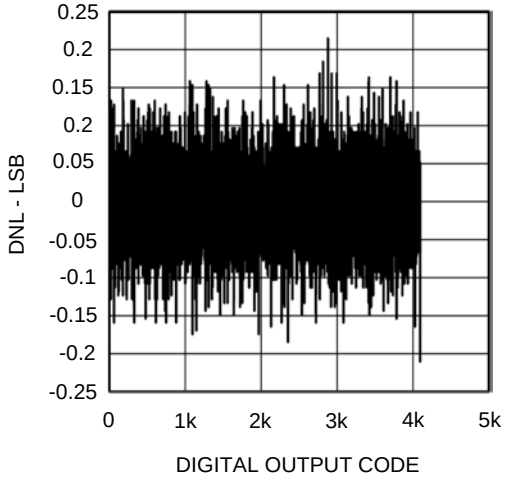

Offset Error vs Supply Voltage

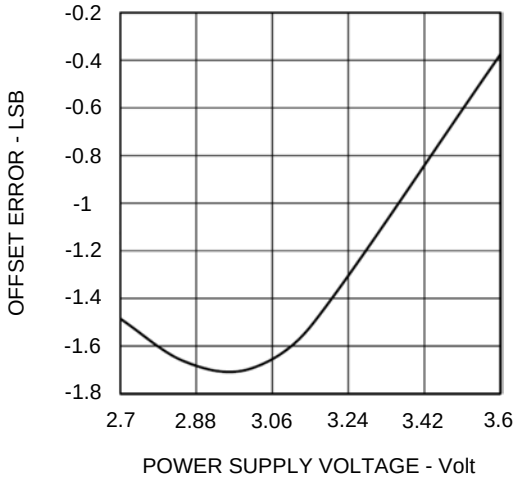

Offset Error vs Temperature

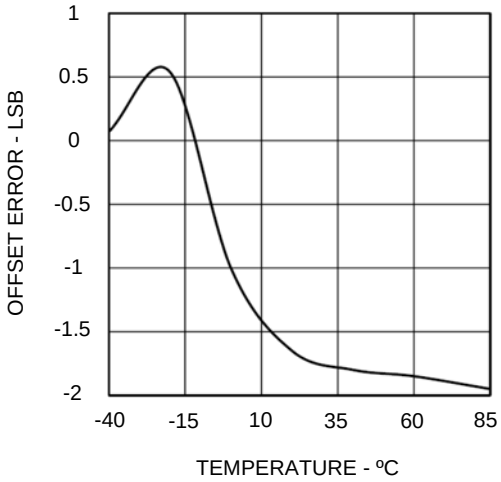

Gain Error vs Supply Voltage

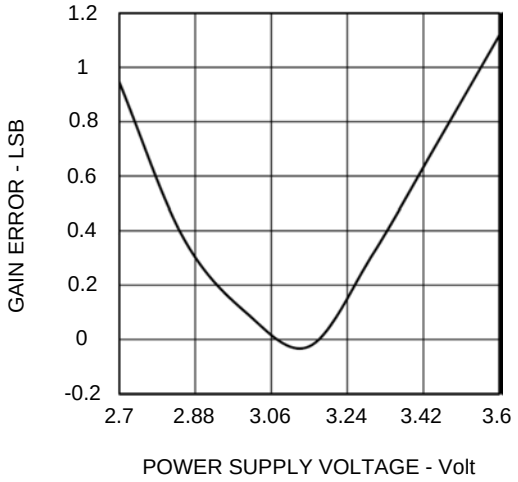

Gain Error vs Temperature

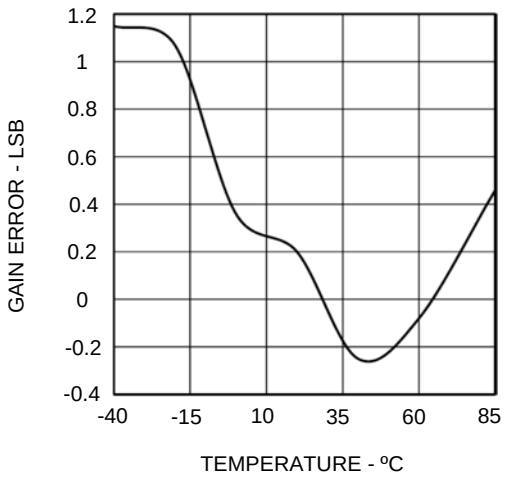

TYPICAL PERFORMANCE CHARACTERISTICS

V_{DD} = +3V; f_{SCLK} = 4.8MHz; C_{LOAD} = 20pF; 4.7µF capacitor at REF; T_A = 25ºC, unless otherwise noted.

Internal Reference Output vs Supply Voltage

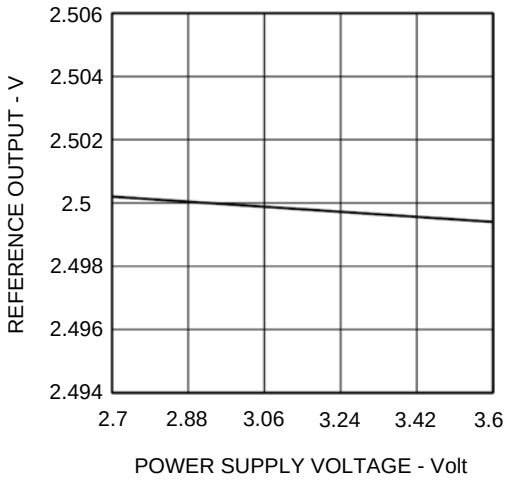

Internal Reference Output vs Temperature

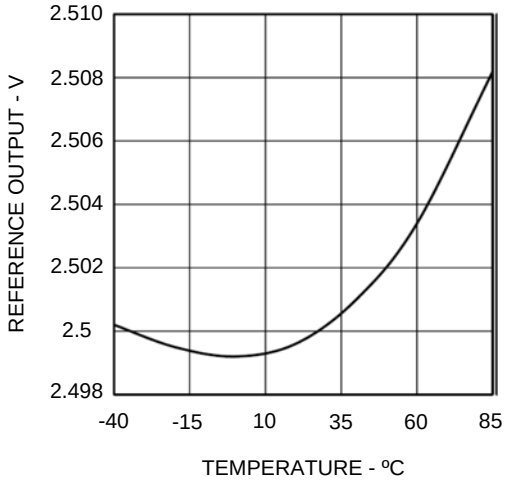

Power Supply Current vs Power Supply Voltage

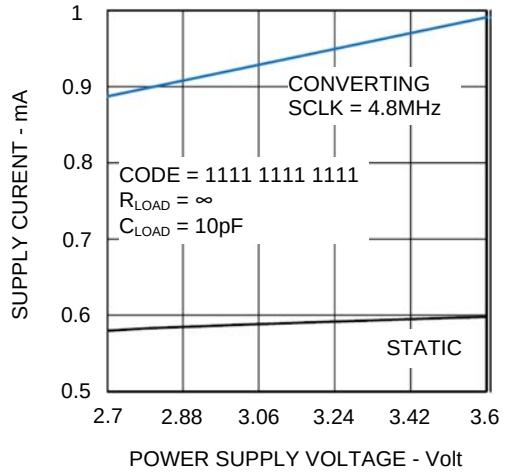

Power Supply Current vs Temperature

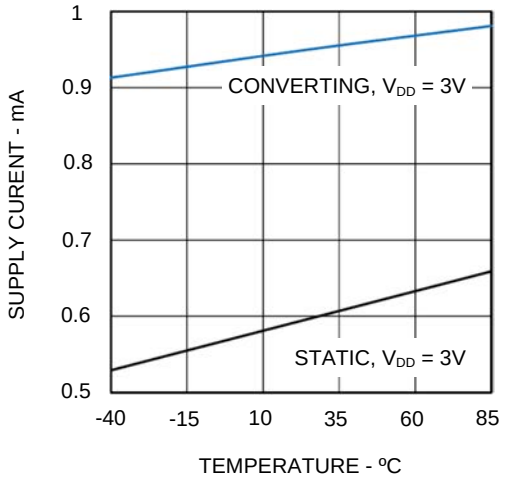

PIN FUNCTIONS

PIN	NAME	FUNCTION
1	VDD	Power Supply Voltage, +2.7V to +3.6V.
2	AIN	Analog Signal Input; Unipolar, 0 to VREF input range.
3	$\overline{SHDN}$	Active-Low Shutdown Input. Toggling $\overline{SHDN}$ high-to-low powers down the TS7003 and reduces the supply current to 0.2µA (typ).
4	GND	Analog and Digital Ground. Connect the TS7003's GND pin at one and only one point to the system analog ground plane.
5	REF	Reference Voltage for Analog-to-Digital Conversion – an internal 2.5V reference output. Bypass with a good-quality 4.7µF capacitor.
6	$\overline{CS}$	Active-Low Chip Select. The $\overline{CS}$ signal initiates the conversion process on its falling edge. When the CS input is logic high, DOUT is high impedance.
7	DOUT	Serial-Data Output. DOUT toggles state on SCLK's rising edge and is high impedance when CS is logic high.
8	SCLK	Serial-Clock Input. The SCLK signal controls the conversion process and transfers output data at rates up to 4.8MHz.

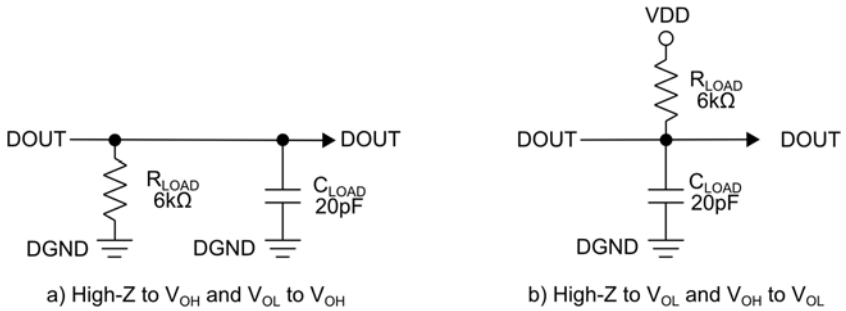

Figure 1: Output Loading Circuits for DOUT Enable Time (t_{DOE}).

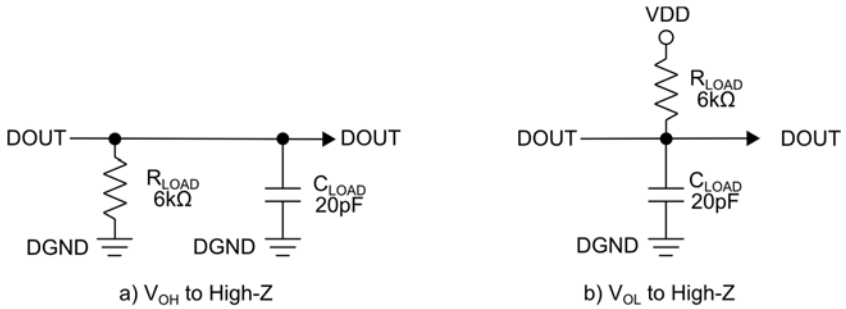

Figure 2: Output Loading Circuits for DOUT Disable Time (t_{DOD}).

DESCRIPTION OF OPERATION

Converter Operation

The TS7003 uses an input track-and-hold (T/H) and a successive-approximation register (SAR) circuitry to convert an analog input signal to a digital 12-bit output. No external-hold capacitor is needed for the track/hold circuit. Figure 3 illustrates the TS7003 in its simplest configuration. The TS7003 converts input

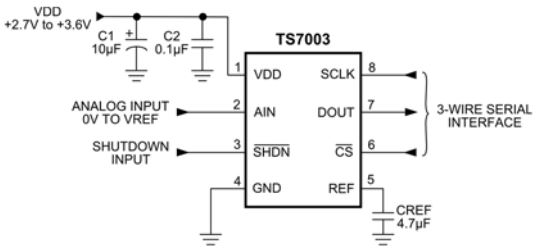

Figure 3: TS7003 Typical Application Circuit.

signals within the 0V to V_{REF} range in 3.3µs including the track-and-hold's acquisition time. The serial interface requires only three digital lines (SCLK, $\overline{CS}$, and DOUT) and provides an easy interface to microprocessors (µPs) and microcontrollers (µCs).

The TS7003 has two operating modes: normal and shutdown. Toggling (or driving) the $\overline{SHDN}$ pin low shuts down the ADCs and reduces supply current below 1 µA when $V_{DD} \leq 3.6V$. Open-circuiting or toggling (or driving) the $\overline{SHDN}$ pin high or places the ADCs into operational mode. Toggling the $\overline{CS}$ pin to logic low initiates a conversion where the conversion result is available at DOUT in unipolar serial format. The serial data stream consists of three leading zeros followed by the data bits with the MSB first. All transitions on the DOUT pin occur within 20ns after the low-to-high transition of SCLK. Serial interface timing details of the TS7003 are illustrated in Figures 8 and 9.

Analog Input

Figure 4 illustrates the sampling architecture of the

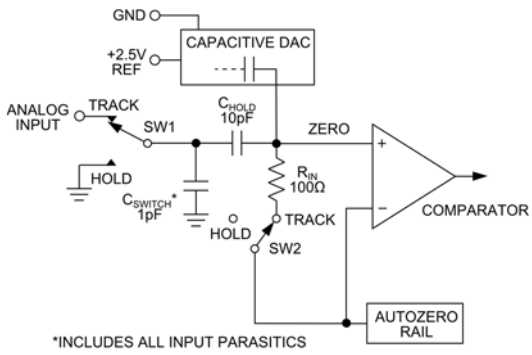

Figure 4: TS7003 Equivalent Input Circuit Details.

analog-to-digital converter's comparator. The full-scale input voltage is set by the TS7003's internal 2.5-V reference.

Track-and-Hold Operation

During track mode, the analog signal is acquired and stored on the internal hold capacitor. During hold mode, the track/hold switches SW1 and SW2 are opened thereby maintaining a constant input level to the converter's SAR subcircuit.

During the acquisition phase with SW1 and SW2 on TRACK, the input capacitor, C_{HOLD}, is charged to the analog input (AIN). Toggling the $\overline{CS}$ pin low causes the acquisition process to stop. At this instant, track/hold switches SW1 and SW2 are moved to HOLD position and the input side of C_{HOLD} is then switched to GND. Unbalancing Node ZERO at the comparator's input, the retained charge on C_{HOLD} represents a sample of the input signal applied to the converter.

In hold mode and to restore Node ZERO to 0V within the limits of the converter's 12- bit resolution, the output of the capacitive digital-to-analog converter (the CDAC) is adjusted during the remainder of the conversion cycle. In other words, the stored charge on C_{HOLD} is transferred to the binary-weighted CDAC where it is converted into a digital representation of the analog input signal. At end of the conversion

process, the input side of C_{HOLD} is switched back to AIN so as to be charged to the input signal again.

An ADC's acquisition time is function of how fast its input capacitance can be charged. If an input signal's driving-point source impedance is high, the acquisition time is lengthened and more time must be allowed between conversions. The acquisition time (t_{ACQ}) is the maximum time the ADC requires to acquire the signal and is also the minimum time needed for the signal to be acquired. The TS7003's acquisition time is calculated from the following expression:

$$t_{ACQ} = 9 \times (R_S + R_{IN}) \times 10pF$$

where R_{IN} = 100Ω (the TS7003's internal track/hold switch resistance), R_S = the input signal's source impedance, and t_{ACQ} is never less than 625ns.

Because of the input structure of the TS7003, sources with output impedances of 1kΩ or less do not affect significantly the AC performance of the TS7003. The TS7003 can still be used in applications where the source impedance is higher so long as a 0.01µF capacitor is connected between the analog input and GND. Limiting the ADC's input signal bandwidth, the use of an external, input capacitor forms an RC filter with the input's source impedance.

Input Bandwidth Considerations

Since the TS7003's input track-and-hold circuit exhibits a 10 MHz small-signal bandwidth, it is possible to measure periodic signals and to digitize high-speed transient events with signal bandwidths higher than the TS7003's sampling rate by using undersampling techniques. To avoid the aliasing of high-frequency signals into the frequency band of interest, the use of external anti-alias filter circuits (discrete or integrated) is recommended. The time constant of the external anti-alias filter should be set so as not to interfere with the desired signal bandwidth.

Analog Input Protection

The TS7003 incorporates internal protection diodes that clamp the analog input between V_{DD} and GND. These internal protection diodes allow the AIN pin to swing from GND - 0.3V to V_{DD} + 0.3V without causing damage to the TS7003. However, for accurate conversions near full scale, the input signal must not exceed V_{DD} by more than 50mV or be lower than GND by 50mV.

If the analog inputs can exceed 50mV beyond the supplies, then the current in the forward-biased protection diodes should be limited to less than 2mA since large fault currents can affect conversion results.

Internal Reference Considerations

The TS7003 has an internal voltage reference that is factory-trimmed to 2.5V. The internal reference output is connected to the REF pin and is also connected to the ADC's internal CDAC. The REF output can be used as a reference voltage source for other components external to the ADC and can source up to 750µA. To maintain conversion accuracy to within 1 LSB, a 4.7µF capacitor from the REF pin to GND is recommended. While larger-valued capacitors can be used to further reduce reference wide-band noise, larger capacitor values can increase the TS7003's wake-up time when exiting from shutdown mode (see the "Using $\overline{SHDN}$ to Reduce Operating Supply Current" section for more information). When in shutdown (that is, when $\overline{SHDN}$ = 0), the TS7003's internal 2.5-V reference is disabled.

Serial Digital Interface

Initialization after Power-Up and Starting a Conversion

If the $\overline{SHDN}$ pin is not driven low upon an initial, cold-start condition, it may take up to 2.5ms for a fully-discharged 4.7µF reference bypass capacitor to provide adequate charge for specified conversion accuracy. As a result, conversions should not be initiated during this reference capacitor charge-up delay. To initiate a conversion, the $\overline{CS}$ pin is toggled (or driven) low. At the $\overline{CS}$'s falling edge, the TS7003's internal track-and-hold is placed in hold mode and a conversion is initiated. Data can then be transferred out of the ADC using an external serial clock.

Using the ADC's $\overline{SHDN}$ to Reduce Operating Supply Current

Power consumption can be reduced significantly by turning off the TS7003 in between conversions.

Figure 5: TS7003 Supply Current vs Conversion Rate

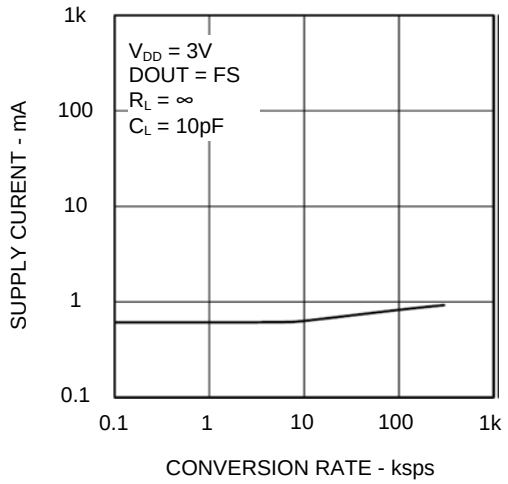

Figure 5 illustrates the TS7003's average supply current versus conversion rate. The wake-up delay time (t_{WAKE}) is the time from when the $\overline{SHDN}$ pin is deasserted to the time when a conversion may be initiated (Refer to Figure 6). This delay time depends on how long the ADC was in shutdown (Refer to Figure 7) because the external 4.7µF reference bypass capacitor is discharged slowly when $\overline{SHDN}$ = 0.

Timing and Control Details

The $\overline{CS}$ and SCLK digital inputs control the TS7003's conversion-start and data-read operations. The ADC's serial-interface operations are illustrated in Figures 8 and 9.

A $\overline{CS}$ high-to-low transition initiates the conversion sequence - the input track-and-hold samples the input signal level, the ADC begins to convert, and the DOUT pin changes state from high impedance to logic low. The external SCLK signal is used to drive the conversion process and is also used to transfer the converted data out of the ADC as each bit of conversion is determined.

The SCLK signal transfers data after a low-to-high transition of the third (3rd) SCLK pulse. After each subsequent SCLK rising edge, transitions on the DOUT pin occur in 20ns. The third rising clock edge produces the MSB of the conversion at DOUT, followed by the remaining bits. Since there are twelve data bits and three leading zeros, at least fifteen rising clock edges are needed to transfer the entire data stream. Extra SCLK pulses occurring after the conversion result has been completely transferred out and, before to a new, low-to-high transition on $\overline{CS}$, produce a string trailing zeros at DOUT. In addition, the extra SCLK pulses have no effect on converter operation.

Minimum conversion cycle time can be accomplished by: (a) toggling the $\overline{CS}$ pin high after reading the conversion result's LSB; and (b), after the specified minimum time defined by t_{CS} has elapsed, toggling the $\overline{CS}$ pin low again to initiate the next conversion.

Output Data Coding and Transfer Function

Conversion results at the TS7003's DOUT pin are straight binary data. Figure 10 illustrates the nominal transfer function where code transitions occur halfway between successive integer LSB values. If V_{REF} = +2.500V, then 1 LSB = 610µV or 2.500V/4096.

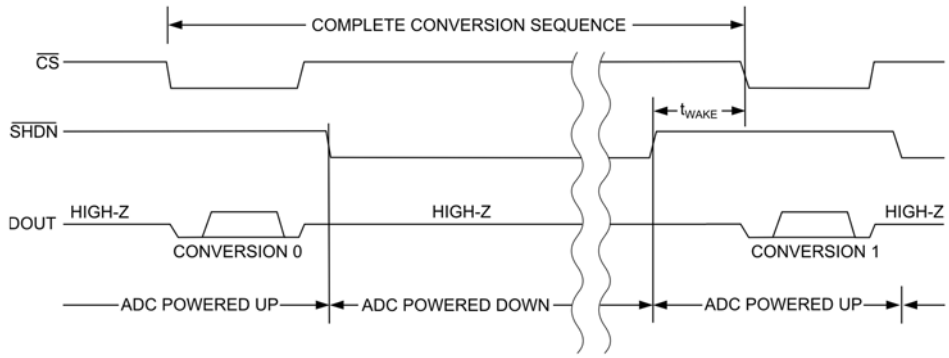

Figure 6: TS7003 Shutdown Operation.

Figure 7: TS7003 Reference Power-Up Delay vs Duration in Shutdown Mode

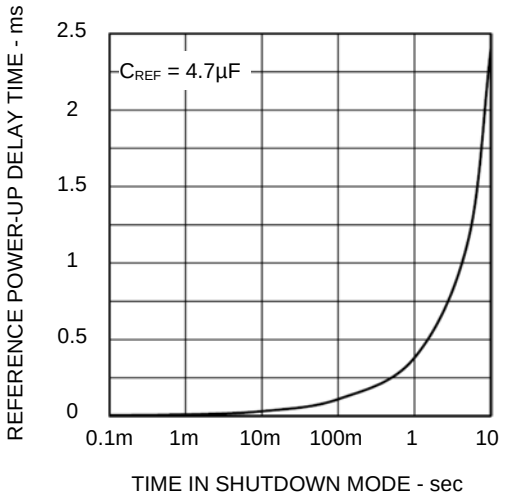

APPLICATIONS INFORMATION

Connection to Industry-Standard Serial Interfaces

The TS7003's serial interface is fully compatible with SPI/QSPI and MICROWIRE standard serial interfaces (Refer to Figure 11). For serial interface operation with these standards, the CPU's serial interface should be set to master mode so the CPU then generates the serial clock. Second, the CPU's serial clock should be configured to operate up to 4.8MHz. The process to configure the serial clock and data transfer operation is as follows:

1) Using a general-purpose I/O line from the CPU, the $\overline{CS}$ pin is driven low to start a conversion. DOUT transitions from high impedance to logic low. The SCLK polarity should be low to start the conversion process correctly.

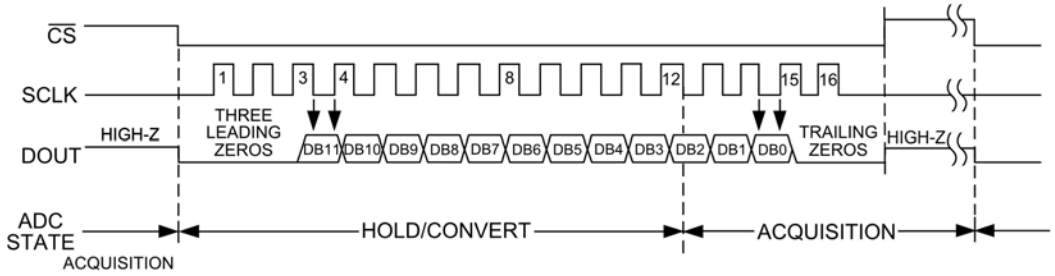

Figure 8: TS7003 Serial Interface Timing Sequence

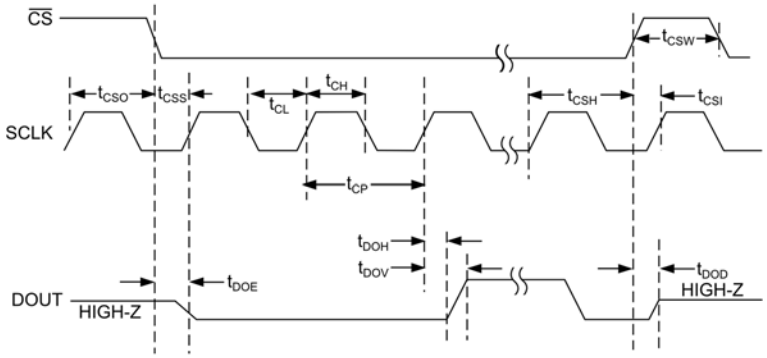

Figure 9: TS7003 Serial Interface Timing Specifications in Detail.

2) Next, SCLK is activated for a minimum of 15 SCLK cycles where the first two SCLKs produce zeros at the DOUT pin. Data at DOUT is formatted MSB first and DOUT transitions occur 20ns after the third (3rd) SCLK low-to-high transition. Once the low-to-high SCLK transition has occurred, data is valid at DOUT

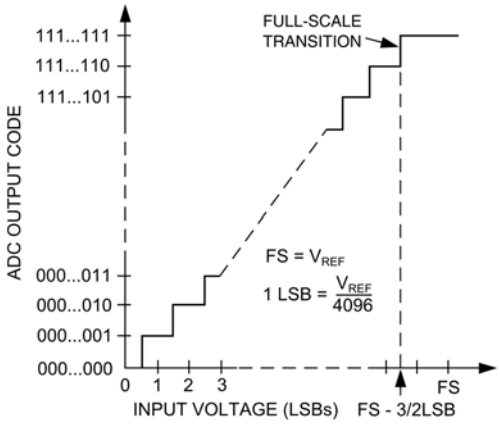

Figure 10: ADC Unipolar Transfer Function for Straight Binary Digital Data.

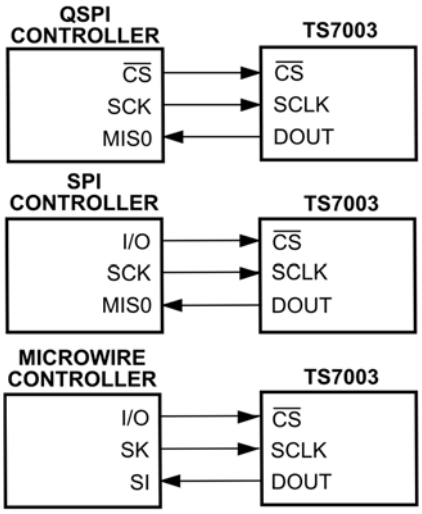

Figure 11: TS7003 Circuit Connections to Industry-Standard Serial Interfaces

according to the t_{DOV} (SCLK Rise to DOUT Valid) timing specification. Valid output data can then be transferred into µP or µCs on SCLK low-to-high transitions.

3) At or after the 15th SCLK low-to-high transition, the $\overline{CS}$ pin can be toggled high to halt the transfer process. If the $\overline{CS}$ pin remains low and the SCLK is still active, trailing zeros are transferred out after the LSB.

4) Once the $\overline{CS}$ pin is held at logic high for at least t_{CS}, a new conversion cycle is started when the $\overline{CS}$ pin is toggled low. If a conversion is aborted by toggling the $\overline{CS}$ pin high before the current conversion has completed, a new conversion cycle can only be started after a the ADC has acquired the signal (t_{ACQ}).

The $\overline{CS}$ pin must be held low and SCLK active until all data bits are transferred out of the ADC. As shown in Figure 8, data can be transferred in two 8-bit bytes or continuously. The bytes contain the result of the conversion padded with three leading 0s in the first 8-bit byte and 1 trailing 0 in the second 8-bit byte.

SPI and MICROWIRE Interface Details

When using an SPI or MICROWIRE interface, setting [CPOL:CPHA] = [0:0] configures the microcontroller's serial clock and sampling edge for the TS7003. The conversion commences on a high-to-low transition of the $\overline{CS}$ pin. The DOUT pin transitions from a high-impedance state to a logic low, indicating a conversion is in progress. Two consecutive 1-byte data reads are required to transfer the full 12-bit result from the ADC. DOUT output data transitions occur on the SCLK's low-to-high transition and are transferred into the downstream microcontroller on the SCLK's low-to-high transition.

The first byte contains three leading 0s and then five bits of the conversion result. The second byte contains the remaining seven bits of the conversion result and one trailing zero. Refer to Figure 11 for the circuit connections and to Figure 12 for all timing details.

QSPI Details

Using a QSPI microcontroller, setting [CPOL:CPHA] = [0:1] configures the microcontroller's serial clock and sampling edge for the TS7003. Unlike the SPI, which requires two 1-byte reads to transfer all 12 bits of data from the ADC, the QSPI allows a minimum number of clock cycles necessary to transfer data from the ADC to the microcontroller. Thus, the TS7003 requires 15 SCLK clock cycles from the microcontroller to transfer the 12 bits of data with no trailing zeros. As shown in Figure 13, the conversion results contain two leading 0s followed by the MSB-first-formatted, 12-bit data stream.

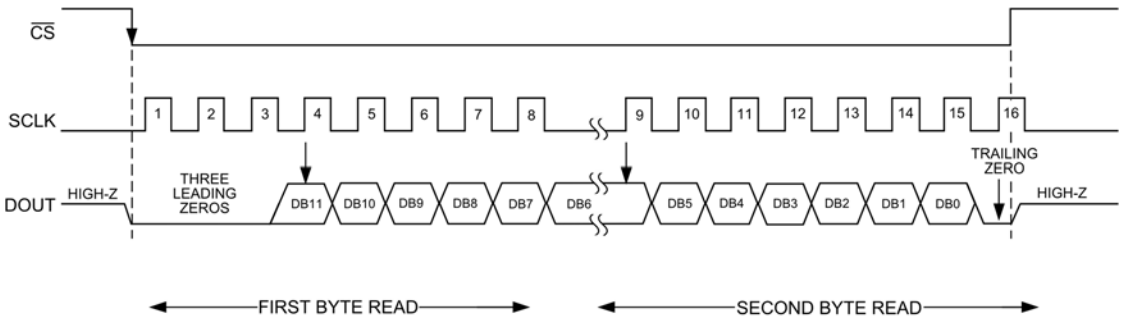

Figure 12: SPI/MICROWIRE-TS7003 Serial Interface Timing Details with [CPOL:CPHA] = [0:0].

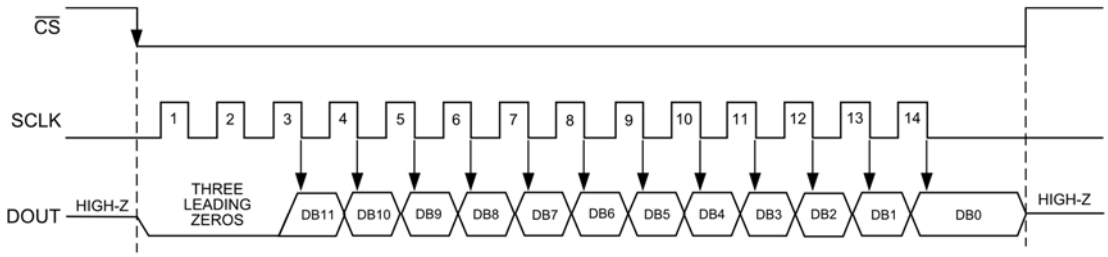

Figure 13: QSPI-TS7003 Serial Interface Timing Details with [CPOL:CPHA] = [0:1].

PCB Layout, Ground Plane Management, and Capacitive Bypassing

For best performance, printed circuit boards should always be used and wire-wrap boards are not recommended. Good PC board layout techniques ensure that digital and analog signal lines are kept separate from each other, analog and digital (especially clock) lines are not routed parallel to one another, and high-speed digital lines are not routed underneath the ADC package.

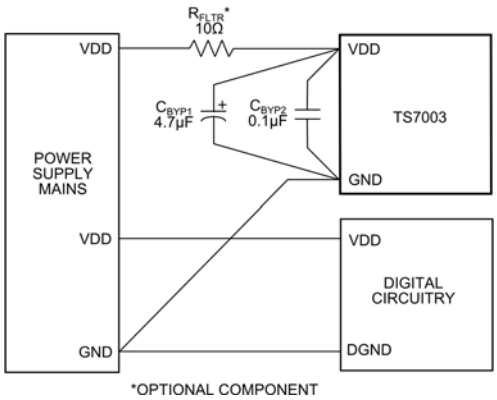

Figure 14: Recommended Power Supply Bypassing and Star Ground Configuration.

A recommended system ground connection is illustrated in Figure 14. A single-point analog ground (star ground point) should be created at the ADC's GND and separate from the logic ground. All analog grounds as well as the ADC's GND pin should be connected to the star ground. No other digital system ground should be connected to this ground. For lowest-noise operation, the ground return to the star ground's power supply should be low impedance and as short as possible.

High-frequency noise on the V_{DD} power supply may affect the ADC's high-speed comparator. Therefore, it is necessary to bypass the V_{DD} supply pin to the star ground with 0.1µF and 1µF capacitors in parallel and placed close to the ADC's Pin 1. Component lead lengths should be very short for optimal supply-noise rejection. If the power supply is very noisy, an optional 10-Ω resistor can be used in conjunction with the bypass capacitors to form a low-pass filter as shown in Figure 14.

PACKAGE OUTLINE DRAWING

8-Pin 3mm x 3mm TDFN-EP Package Outline Drawing

(N.B., Drawings are not to scale)

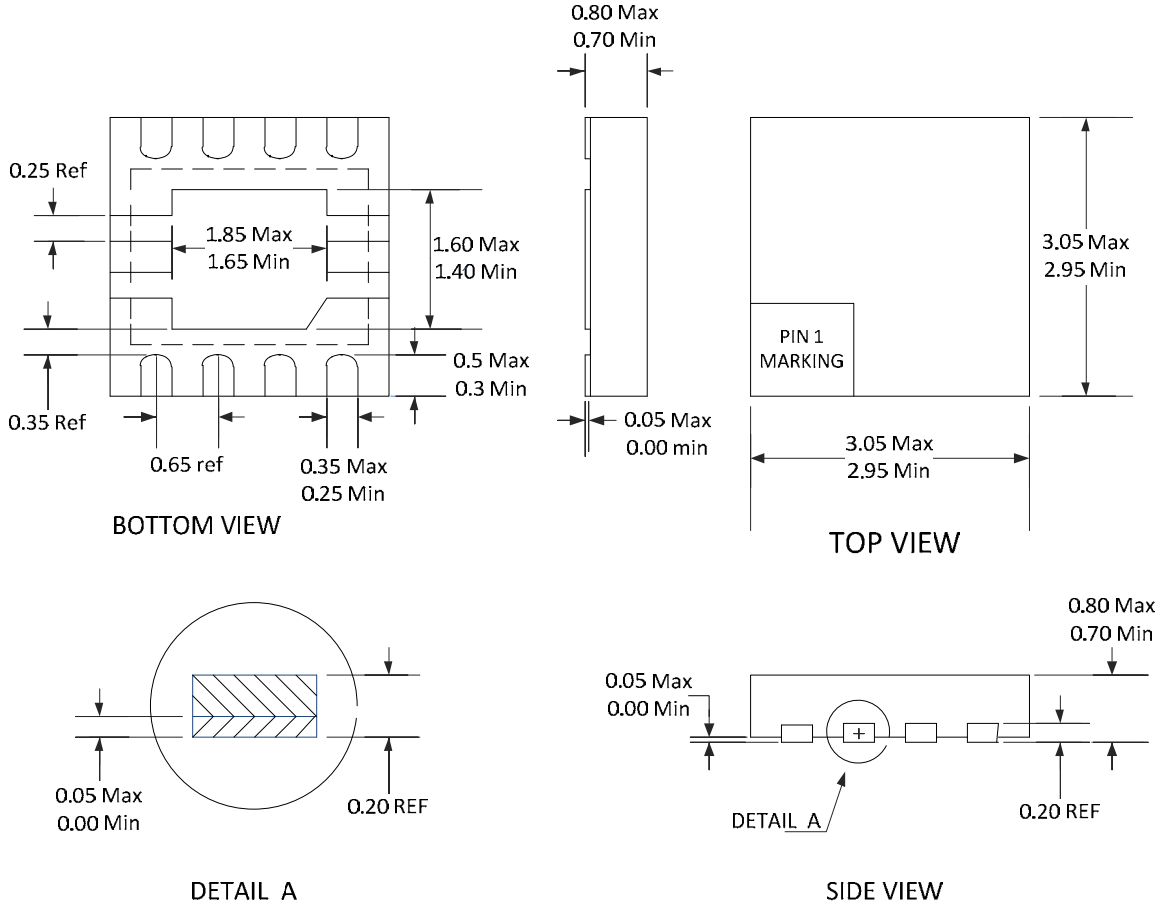

NOTE: CONTROLLING DIMENTIONS IN MILIMETERS
Compliant with JEDEC MO-229

Patent Notice

Silicon Labs invests in research and development to help our customers differentiate in the market with innovative low-power, small size, analog-intensive mixed-signal solutions. Silicon Labs' extensive patent portfolio is a testament to our unique approach and world-class engineering team.

The information in this document is believed to be accurate in all respects at the time of publication but is subject to change without notice. Silicon Laboratories assumes no responsibility for errors and omissions, and disclaims responsibility for any consequences resulting from the use of information included herein. Additionally, Silicon Laboratories assumes no responsibility for the functioning of undescribed features or parameters. Silicon Laboratories reserves the right to make changes without further notice. Silicon Laboratories makes no warranty, representation or guarantee regarding the suitability of its products for any particular purpose, nor does Silicon Laboratories assume any liability arising out of the application or use of any product or circuit, and specifically disclaims any and all liability, including without limitation consequential or incidental damages. Silicon Laboratories products are not designed, intended, or authorized for use in applications intended to support or sustain life, or for any other application in which the failure of the Silicon Laboratories product could create a situation where personal injury or death may occur. Should Buyer purchase or use Silicon Laboratories products for any such unintended or unauthorized application, Buyer shall indemnify and hold Silicon Laboratories harmless against all claims and damages.

Silicon Laboratories and Silicon Labs are trademarks of Silicon Laboratories Inc.
Other products or brandnames mentioned herein are trademarks or registered trademarks of their respective holders.

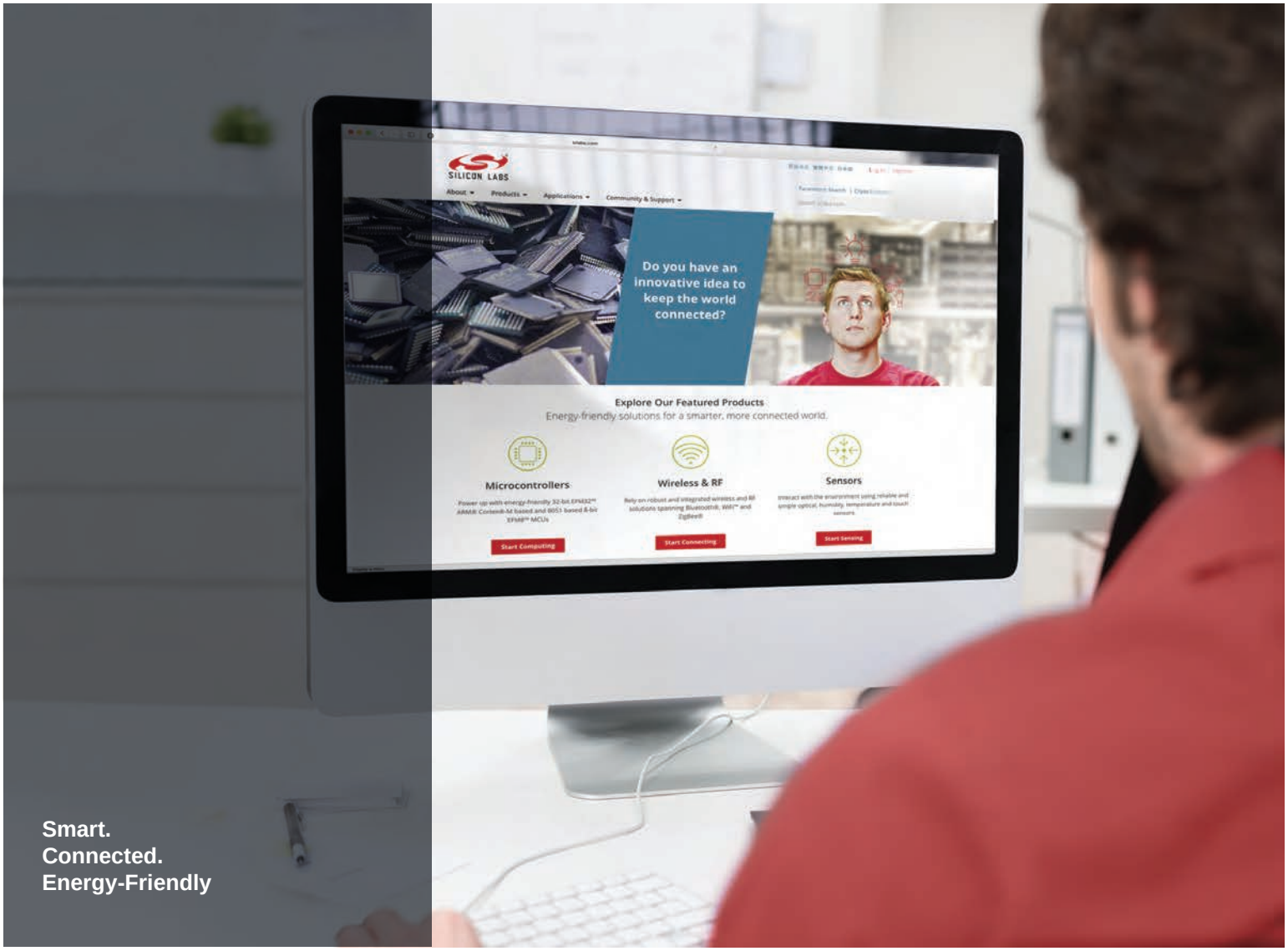

Products
www.silabs.com/products

Quality
www.silabs.com/quality

Support and Community
community.silabs.com

Disclaimer
Silicon Laboratories intends to provide customers with the latest, accurate, and in-depth documentation of all peripherals and modules available for system and software implementers using or intending to use the Silicon Laboratories products. Characterization data, available modules and peripherals, memory sizes and memory addresses refer to each specific device, and "Typical" parameters provided can and do vary in different applications. Application examples described herein are for illustrative purposes only. Silicon Laboratories reserves the right to make changes without further notice and limitation to product information, specifications, and descriptions herein, and does not give warranties as to the accuracy or completeness of the included information. Silicon Laboratories shall have no liability for the consequences of use of the information supplied herein. This document does not imply or express copyright licenses granted hereunder to design or fabricate any integrated circuits. The products must not be used within any Life Support System without the specific written consent of Silicon Laboratories. A "Life Support System" is any product or system intended to support or sustain life and/or health, which, if it fails, can be reasonably expected to result in significant personal injury or death. Silicon Laboratories products are generally not intended for military applications. Silicon Laboratories products shall under no circumstances be used in weapons of mass destruction including (but not limited to) nuclear, biological or chemical weapons, or missiles capable of delivering such weapons.

Trademark Information
Silicon Laboratories Inc., Silicon Laboratories, Silicon Labs, SiLabs and the Silicon Labs logo, CMEMS®, EFM, EFM32, EFR, Energy Micro, Energy Micro logo and combinations thereof, "the world's most energy friendly microcontrollers", Ember®, EZLink®, EZMac®, EZRadio®, EZRadioPRO®, DSPLL®, ISOmodem ®, Precision32®, ProSLIC®, SiPHY®, USBXpress® and others are trademarks or registered trademarks of Silicon Laboratories Inc. ARM, CORTEX, Cortex-M3 and THUMB are trademarks or registered trademarks of ARM Holdings. Keil is a registered trademark of ARM Limited. All other products or brand names mentioned herein are trademarks of their respective holders.

SILICON LABS

Silicon Laboratories Inc.
400 West Cesar Chavez
Austin, TX 78701
USA

http://www.silabs.com